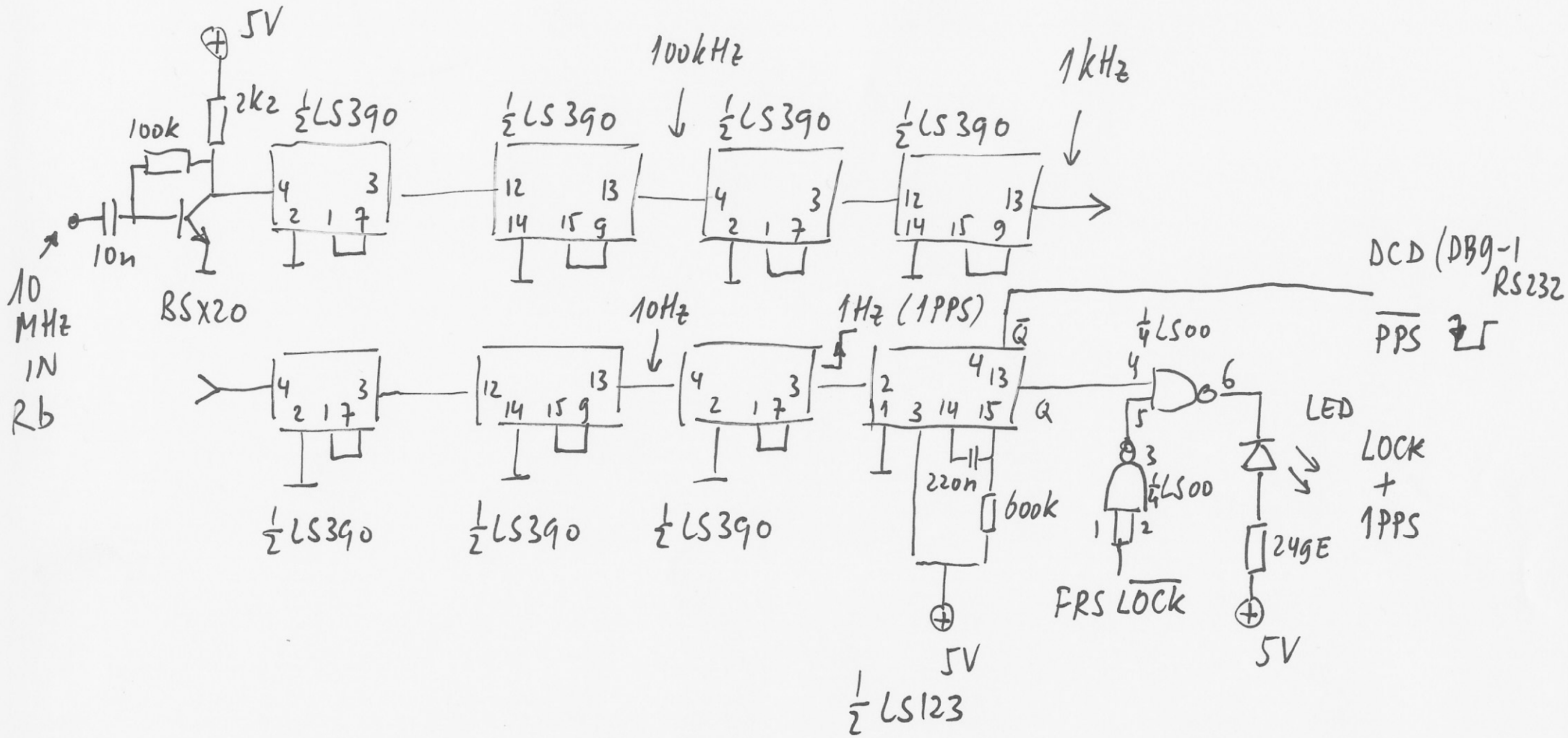

10.000.000 DIVIDER FOR NTP.REMCO.ORG

FEB 2008 PG0A/PA3FYM

(c) remco.org